10. Wiring Diagram

1. Wire Sheet

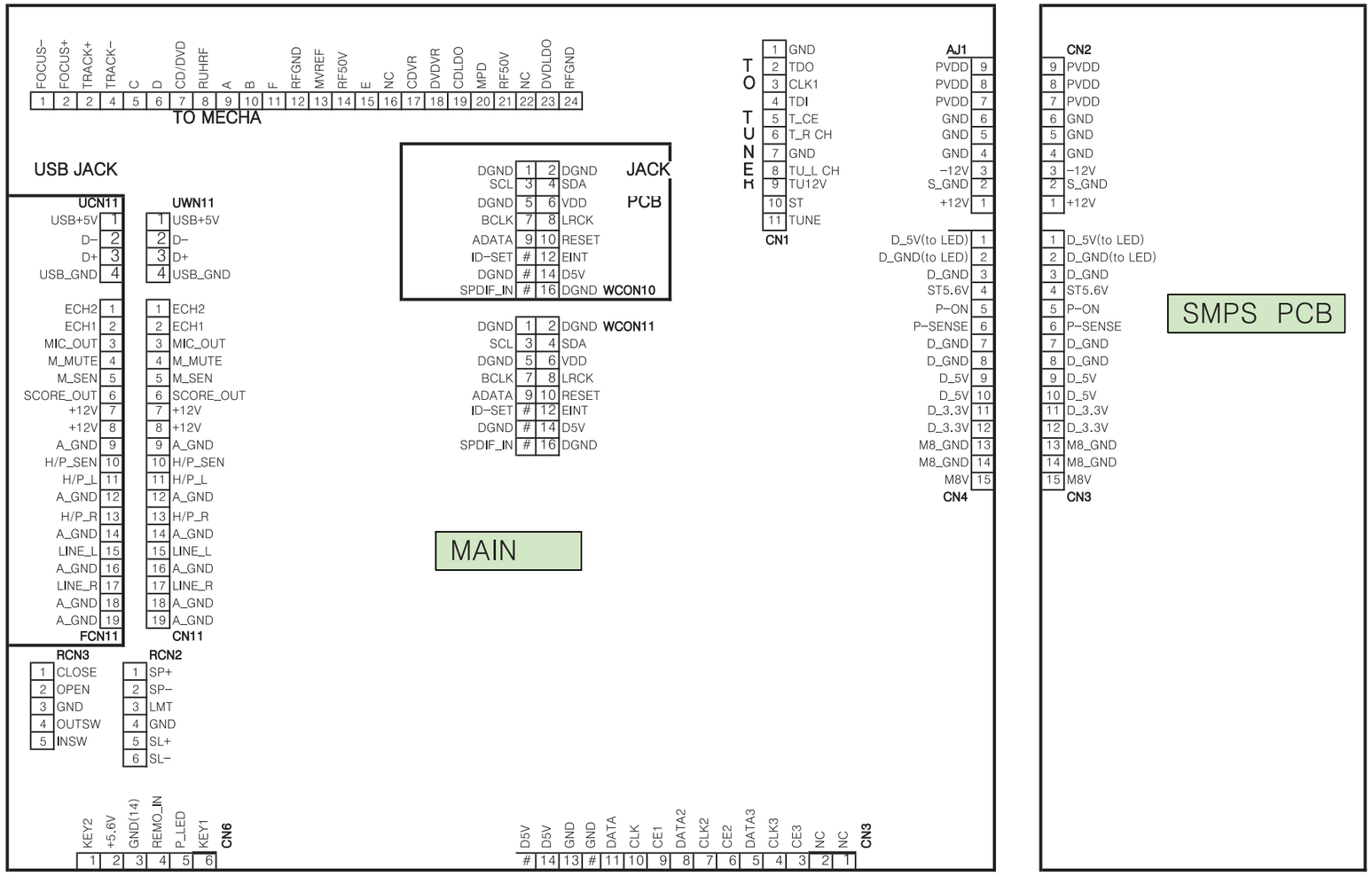

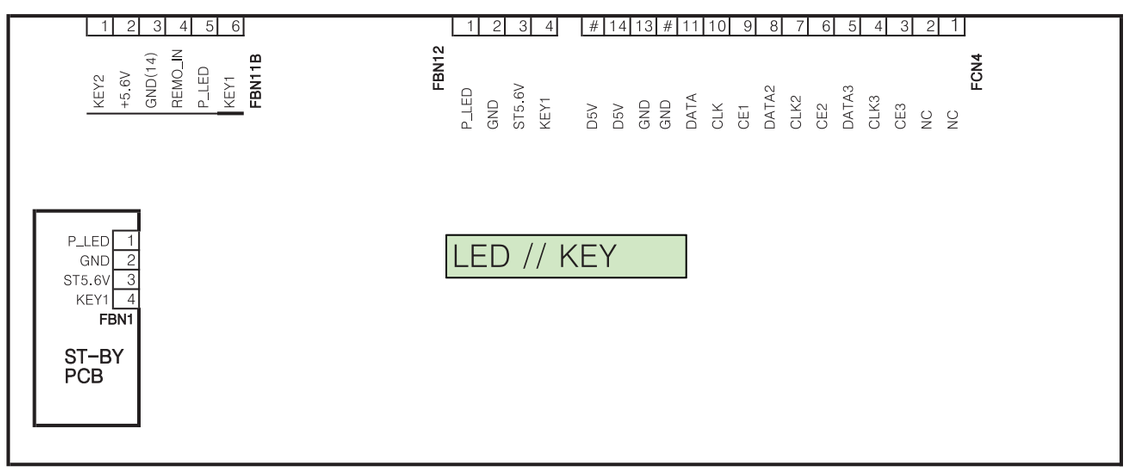

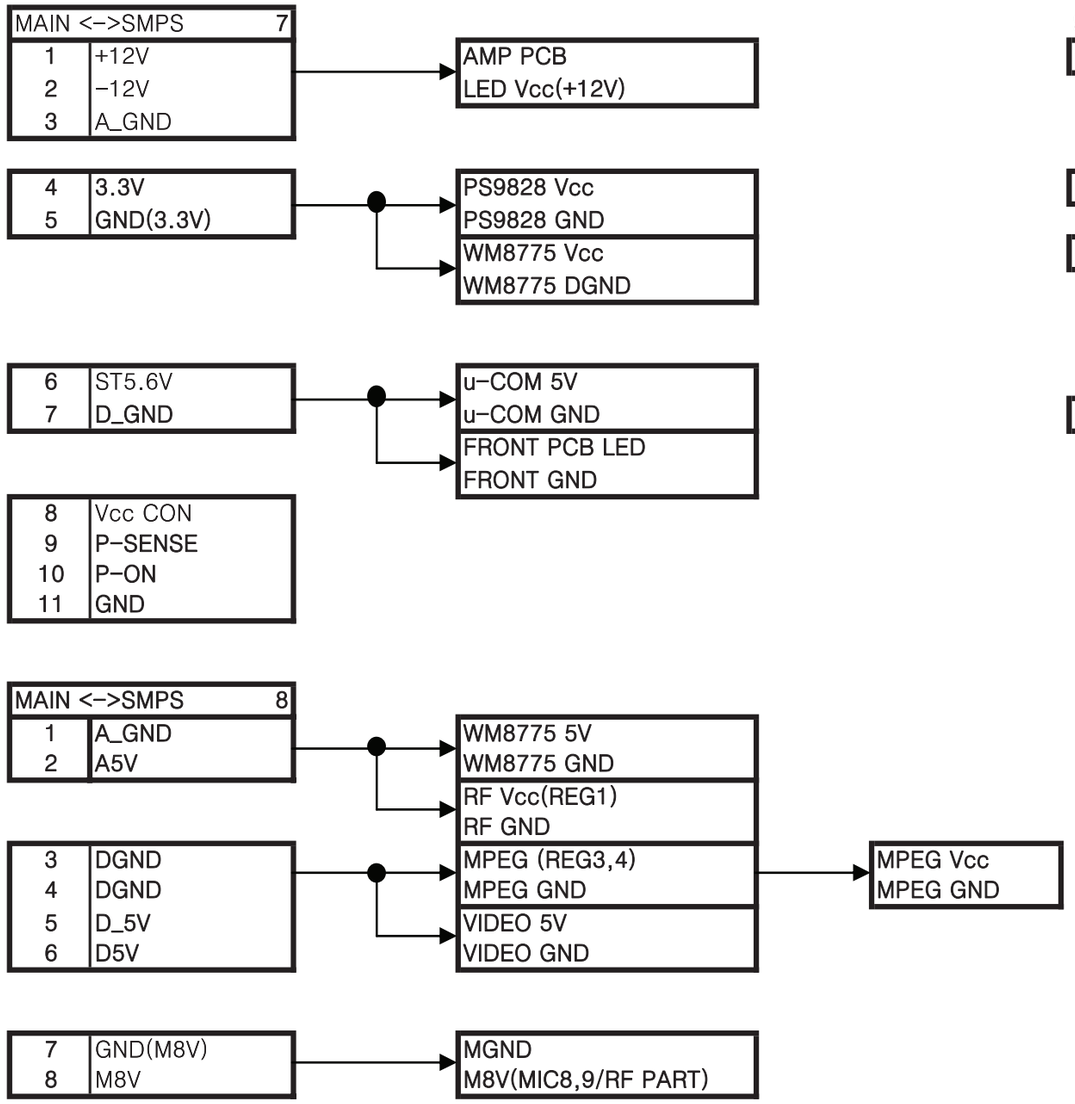
MAIN <->SMPS 7
1 +12V
2 -12V
3 A_GND
AMP PCB
LED Vcc(+12V)
4 3.3V
5 GND(3.3V)
PS9828 Vcc
PS9828 GND
WM8775 Vcc
WM8775 DGND
6 ST5.6V
7 D_GND
u-COM 5V
u-COM GND
FRONT PCB LED
FRONT GND
8 Vcc CON
9 P-SENSE
10 P-ON
11 GND
MAIN <->SMPS 8
1 A_GND
2 A5V
WM8775 5V
WM8775 GND
RF Vcc(REG1)
RF GND
3 DGND
4 DGND
5 D_5V
6 D5V
MPEG (REG3,4)
MPEG GND
VIDEO 5V
VIDEO GND
MPEG Vcc
MPEG GND
7 GND(M8V)
8 M8V
MGND
M8V(MIC8,9/RF PART)

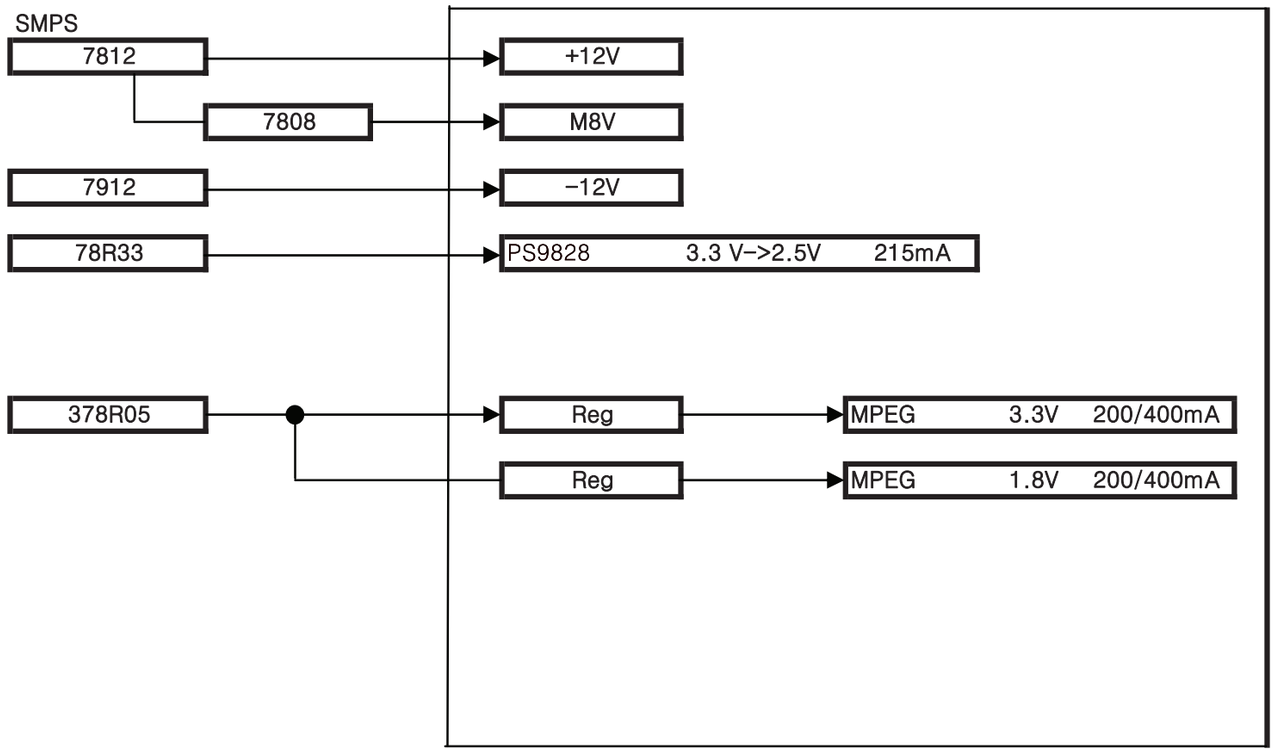
SMPS
7812
+12V
7808
M8V
7912
-12V
78R33
PS9828 3.3 V->2.5V 215mA
378R05
Reg
MPEG 3.3V 200/400mA
Reg
MPEG 1.8V 200/400mA

SMPS
IC SPEC

2004.8.20

MPEG PART	D5V	3.3V 2.2V	600mA	8(2)	
BA7612F	D 5V		20.5mA	8(6)	VIDEO Switch
WM8775	A 5.6V		20mA	8(4)	A/D Convertor
	3.3V		8mA	7(4)	
PS9818	3.3 V->2.5V		215mA	7(4)	PWM Modulator
FAN	12V		60mA	7(1)	
ST LED	ST5V		10mA		
u-COM	ST5V		40mA		

DISCRETE SPEC

±12V	FAN +12V	60mA	
	TUNER 12V	80mA	
		30mA	250mA
D5V	MPEG PART	600mA	
3.3V	BA7612F	20.5mA	
	WM8775	8mA	
	PS9818	215mA	2.3A
A 5.6V	WM8775	20mA	

ST5.6V

MICOM
Remocon Module/VFD

Min	Normal	Max
40mA	200mA	200mA

D5V	D5V	VIC1	BA7512F	20.5mA	BA7512F	20.5
	A5V	AIC3	WM8775	20mA	WM8775	20
	REG3(3.3V)	MIC3	A29L160	20mA	A29L160	20
		MIC4	ES6628	600mA	ES6628	600
		AIC3	WM8775	8mA	WM8775	8
			PS9818	215mA	PS9818	215
						883.5
	REG4(2.0V)	MIC4	ES6628			
R_5V	REG1(RF3.3V	RF3.3V PLL3.3V				

MAIN <->SMPS 7

PITCH: L:

1	+12V
2	-12V
3	A_GND
4	3.3V
5	GND(3.3V)
6	ST5.6V
7	D_GND
8	Vcc CON
9	P-SENSE
10	P-ON
11	GND

PS9828/DAB/sDSM

MAIN <->SMPS 8

PITCH: L:

1	DGND
2	D_5V
3	A_GND
4	A5V
5	DGND
6	D5V
7	GND(M8V)
8	M8V

SMPS<->MAIN 9

PITCH: 2.5mm L:

1	GND
2	GND
3	GND
4	PVDD
5	PVDD
6	PVDD

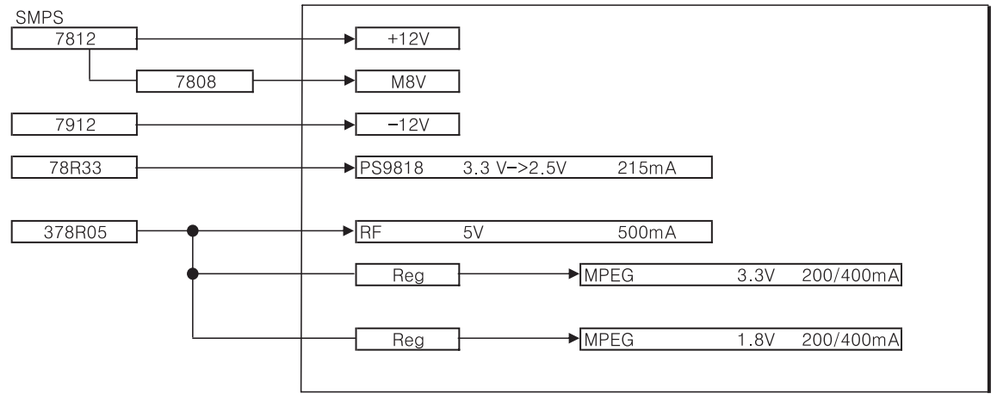

1.SCOPE

SMPS Block						Power Block			
Output Voltage	Allowed Range	Required Current (mA)			Max Power Consumption (Watt)	Voltage (V)	Current (mA)	Allowed Range	Remarks
		Save	Normal	Peak					
PC+31.5V	5%		4000	8000	220.5	+31.5(AMP)	3500	5%	Amp Output : X250(5.1-CH) → 600Watt X200(2.1-CH) → 300Watt
PC+5V	5%		30	100	0.5	+5(LED)	30	5%	Circuit dedicated to LED power is required (a circuit with separated GND and power lines)
PC+5V	5%		400	700	3.5	+5(DIGGITAL)	400	5%	DIGITAL
PC+3.3V	5%		1400	1600	4.95	+3.3(MPEG)	1400	5%	MPEG+PWM
AL+5.6	5%		400	400	2.24	+5.6(MICOM)	400	5%	MICOM
PC+8V	5%		250	400	3.2	+8(MOTOR)	250	5%	MOTOR
PC+12V	5%		300	400	4.8	+12(ANALOG)	300	5%	TUNER+OP_AMP+Fan
PC-12V	5%		200	300	3.6	-12(ANALOG)	200	5%	OP_AMP

2. INPUT CHARCTERISTICS

2.1 Input Voltage

2.1.1 Standard(Normal) input voltage : AC120V / AC230V

2.1.2 Input voltage range : AC96V ~ AC144V / AC176V ~ AC276V

Input Range	Min. Voltage	Nor. Voltage	Max. Voltage	Input Current
Low Range	96 VAC	120 VAC	144 VAC	
High Range	176 VAC	230 VAC	276 VAC	

2.2 Input Frequency

2.2.1 Standard input frequency : 50 Hz /60 Hz

2.2.2 Input frequency range : 47 Hz~63 Hz

3. Pin Assignment

Pin No.	Output				Input
	CN2(MAIN)		CN3(AMP)		CN1
	Name	Remarks	Name	Remarks	Name
1	+12V	Analog +12V	L_5V	LED Power separated from D_5V	AC
2	A_GND	Analog GND	L_GND	LED GND separated from D_GND	AC
3	-12V	Analog -12v	U_GND	MICOM GND	
4	P_GND	Power Stage GND	U_5.6V	Micom Power	
5	P_GND	Power Stage GND	P_ON	POWER ON	
6	P_GND	Power Stage GND	P_SEN	POWER SENCE	
7	PVDD	Power Stage 31.5V	D_GND	Digital GND	
8	PVDD	Power Stage 31.5V	D_GND	Digital GND	
9	PVDD	Power Stage 31.5V	D_5V	Digital 5V	
10			D_5V	Digital 5V	
11			D_3.3V	Digital 3.3V	
12			D_3.3V	Digital 3.3V	
13			M_GND	Motor GND	
14			M_GND	Motor GND	
15			M_8V	Motor 8V	
Remarks	P=2.5mm, 22AWG		P=2mm, 24AWG		AC-CORD
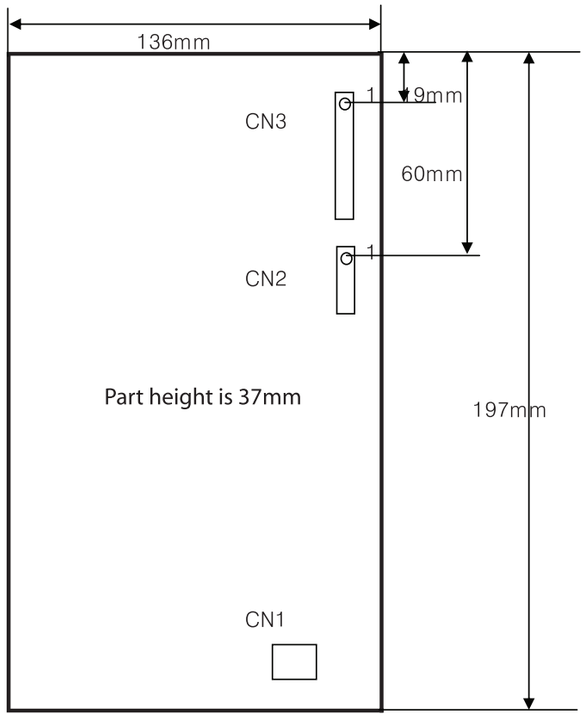
4. Pin Location